1.1.2.7 High Power Thermal Sensors

1.1.2.7.4 Very High Power Water Cooled Thermal Sensors

100W to 120kW

Features

- Highest powers
- Water cooled
- Up to 120kW
- Ø200mm aperture

30K-W-BB-74

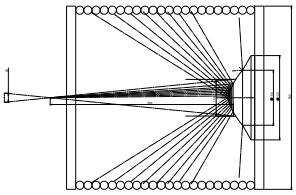

Laser Beam Path

120K-W

Model	**30K-W-BB-74**	**120K-W**
Use	**High power up to 30kW**	**Measuring Highest powers to 120kW**
Measurement Type	Beam deflector + broadband absorber	Water cooled beam absorber chamber with deflecting cone. Separate power measuring unit monitoring input and output cooling water flow and temperature
Spectral Range µm	0.8 - 2, 10.6	0.9 –1.1 [a]
Aperture mm	Ø74mm	Ø200
Power Range for Calibrated Reading	100W – 30kW	10kW – 120kW
Power Noise Level	1W	±20W with stable water temperature
Backscattered Power	~4.3% without Scatter Shield, ~1.3% with Scatter Shield [b, c]	Less than 1%
Maximum Average Power Density kW/cm²	10kW/cm² anywhere in the beam [c]	Designed for near Gaussian beam. The 1/e² beam diameter should have a divergence of 0 to 6 degrees and should be Ø100mm in diameter at the reflecting cone (see sketch above where the beam may also be collimated and not divergent as long as beam diameter requirement is met).
Beam Centering Requirements IMPROPERLY CENTERED BEAM CAN CAUSE DAMAGE TO SENSOR	For circular beam centered within ¼ of beam diameter. Maximum tilt angle ±5 degrees. For rectangular beam please consult Ophir representative.	Beam to be centered on deflecting cone ±5mm and parallel ±2degrees
Response Time 0-95% typ	7s	40s at flow rate 60 liter/min and 60s at flow rate 20 liter/min
Power Accuracy +/-%	5 [a]	5 [a]
Linearity with Power +/-%	2	2
Cooling Requirements	25 liter/min at full power, proportionally less at lower power. Min flow rate 6 liter/min. Water temperature range 15-30ºC. Water temperature rate of change <1ºC/min	Water flow rate, 60 liters/min at max power. Inlet temperature 15-20degC. Inlet water temperature rate of change <0.3degC/min at full power, proportionately less at lower power [b]
Fiber Adapters	Consult Ophir representative	Consult Ophir representative
Water Pressure Drop across Beam Absorber	Pressure drop across sensor ~0.2MPa. Pressure drop across 8 meters of ½" tubing with 9.5mm ID is ~0.3MPa	0.4MPa at 60 liter/min flow rate
Water Connections	Quick connector for ½" OD nylon tubing [c]	Up to 4 meters in each direction of 1" OD 13/16" ID flexible nylon tubing
Outputs	10 meter cable terminated in DB15 smart connector	1. Cable terminated in DB9 plug with RS232 ASCII output reading power, flow rate and temperature on PC (using WaterFlowMeter PC App). Cable lengths 10 meters (recommended for access to full data). 2. Cable terminated in DB15 Ophir smart plug reading power.
Dimensions	See drawing below	See drawing below
Weight kg	19	Beam Absorber 50kg. Power measuring unit 10kg
Compliance	CE, China RoHS	RoHS, China RoHS
Version	V2	
Part number	**7Z02757**	**7Z02691**
Notes: (a)	Calibrated at 1.07µm. For other wavelengths in the range 0.8 – 2µm add up to ± 2% to the calibration error	Calibrated for 1.07 µm
Notes: (b)	When scatter shield is installed, use the 107S laser setting to compensate for the slightly higher reading. When not installed, use the 107 setting	Minimum flow rate should not be below 20 liter/min. It is recommended that the user install a safety interlock flow switch on the return water line (after beam dump) to immediately shut down the laser if flow rate drops
Notes: (c)	For further information and options see **Accessories for High Power Sensors** on pages 73-76	

30K-W-BB-74

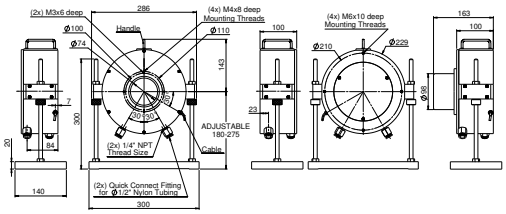

Front Side **Rear Side** **With optional scatter shield**

120K-W

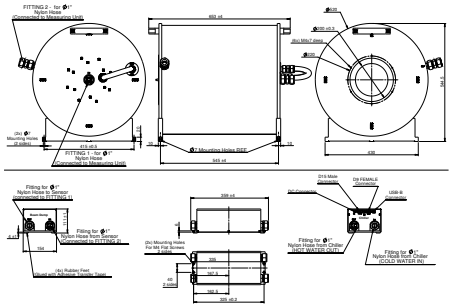

Ophir®
For latest updates please visit our website: www.ophiropt.com/photonics